SCHEMATIC for model ZKIT-1 (C) 2011 by DECWARE

NOTE: TRANSFORMER SHOWN BELOW REPLACES PREVIOUS MODEL. ALL KITS SHIPPED FROM JAN 21, 2011 HAVE THE NEW TRANSFORMER SHOWN BELOW.

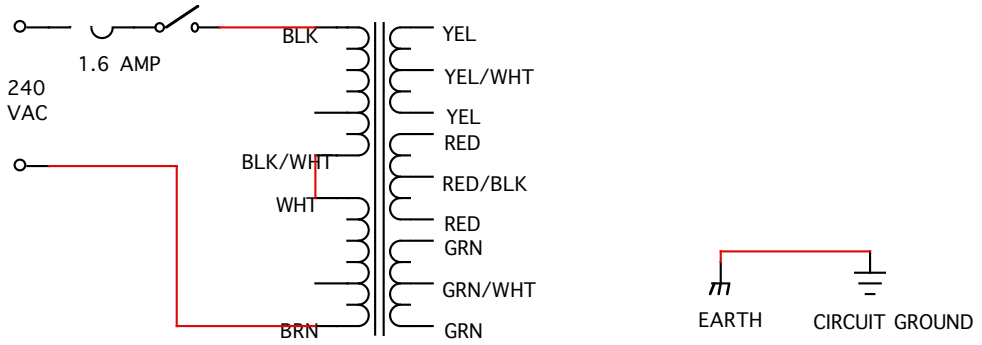
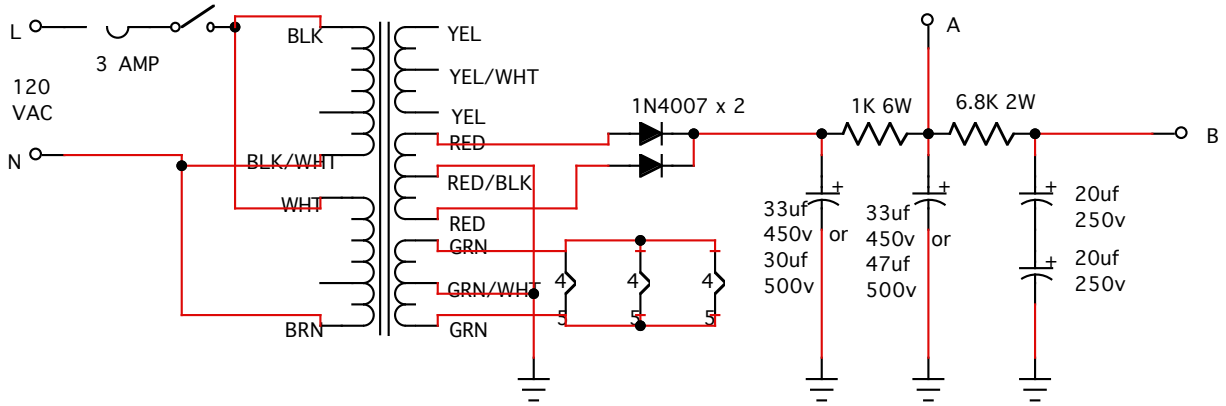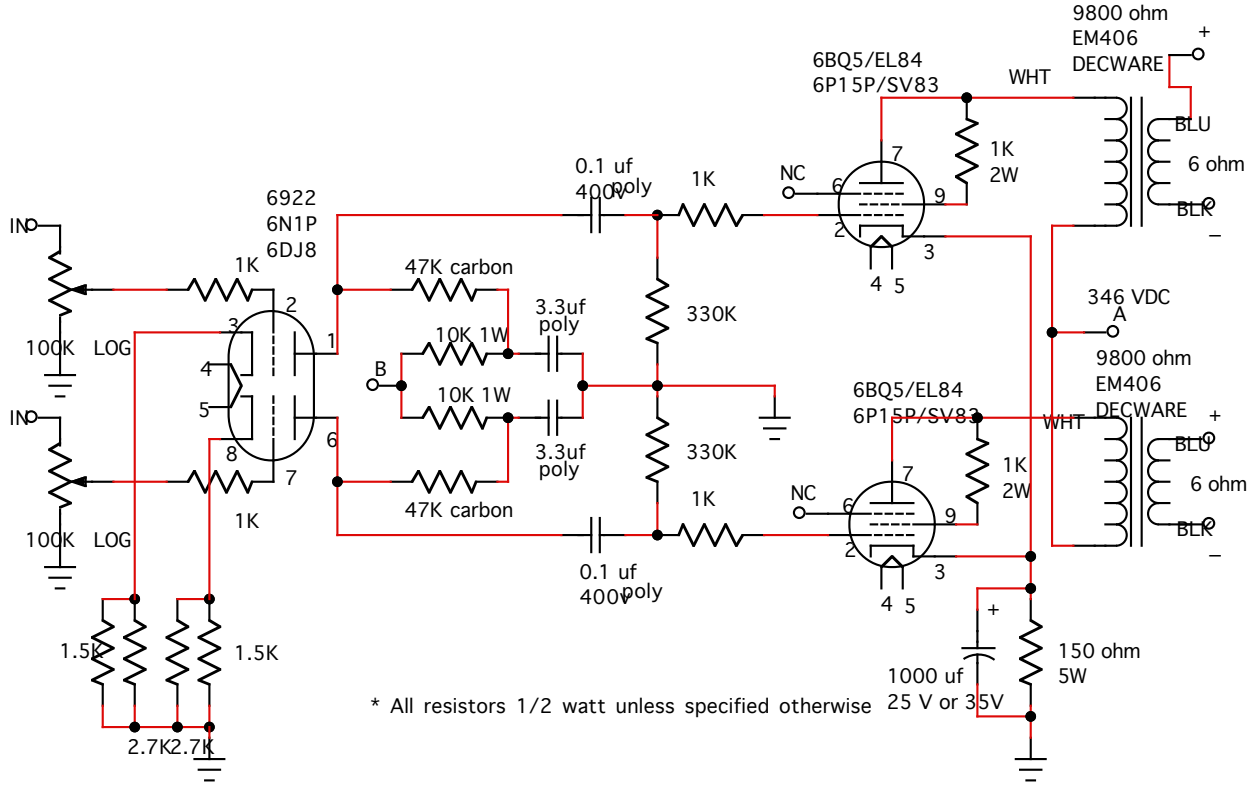
NEW EDCOR/DECWARE 300-0-300 / 150ma 6.3 VCT 5A