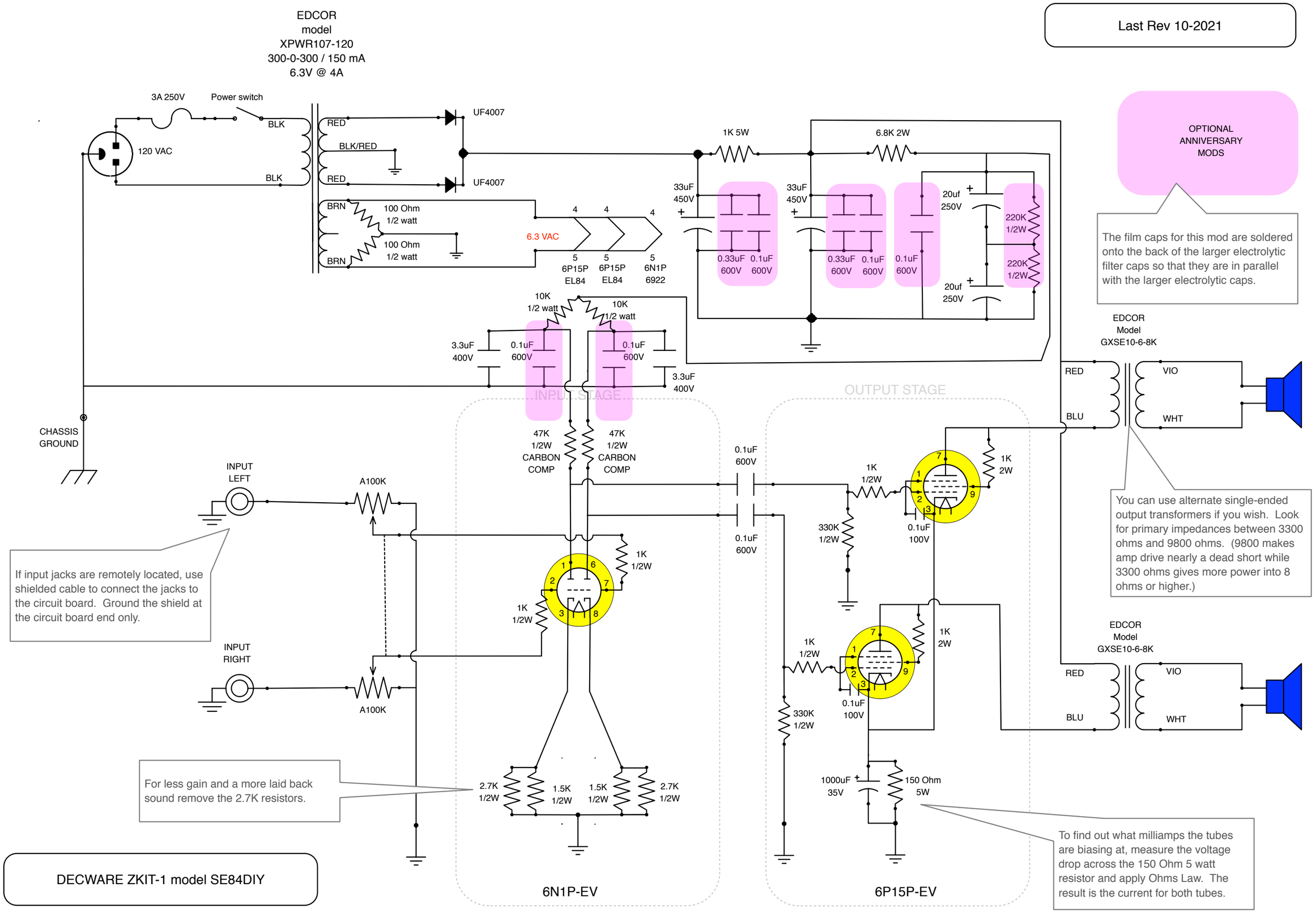

If input jacks are remotely located, use shielded cable to connect the jacks to the circuit board. Ground the shield at the circuit board end only.

For less gain and a more laid back sound remove the 2.7K resistors.

You can use alternate single-ended output transformers if you wish. Look for primary impedances between 3300 ohms and 9800 ohms. (9800 makes amp drive nearly a dead short while 3300 ohms gives more power into 8 ohms or higher.)

To find out what milliamps the tubes are biasing at, measure the voltage drop across the 150 Ohm 5 watt resistor and apply Ohms Law. The result is the current for both tubes.